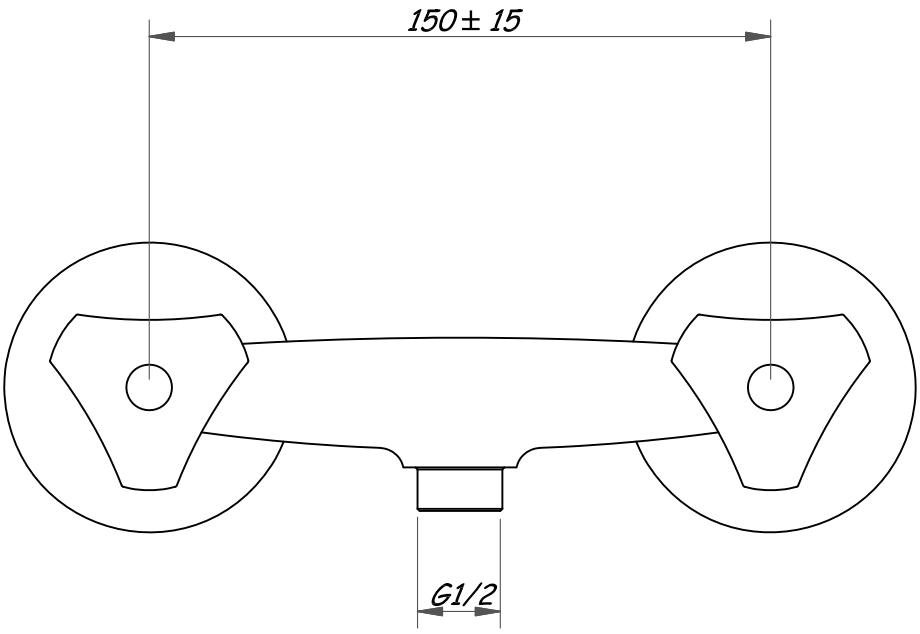
150 ± 15
G1/2

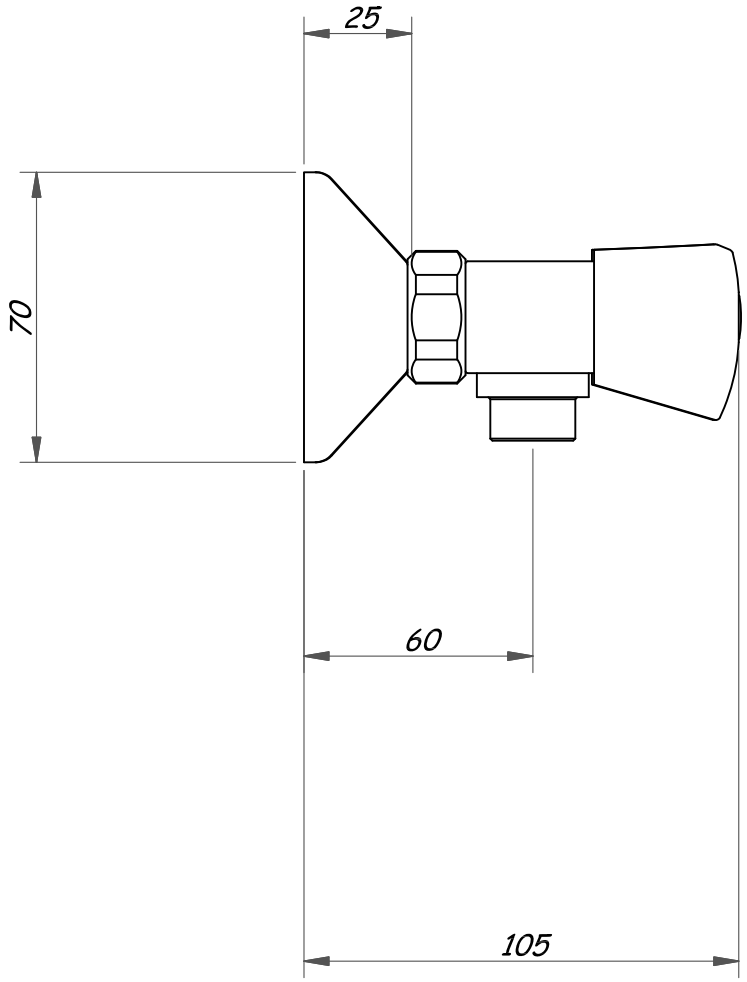
25
70
60
105