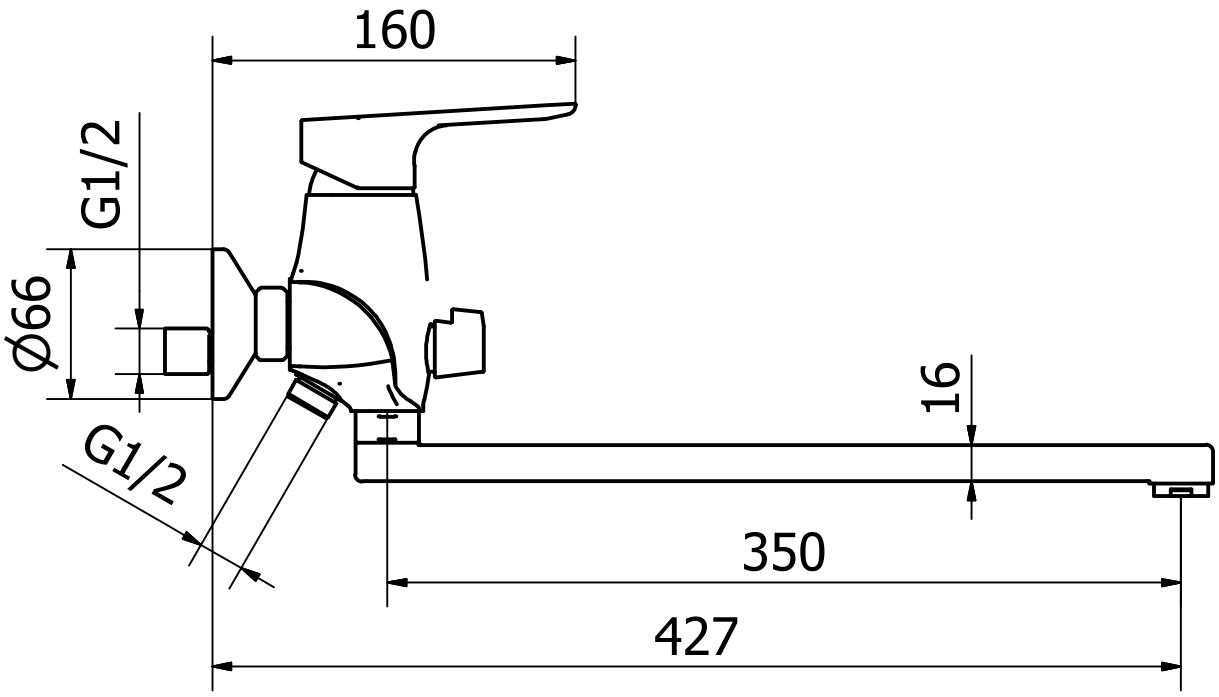
160
G1/2
Ø66
G1/2
16
350
427

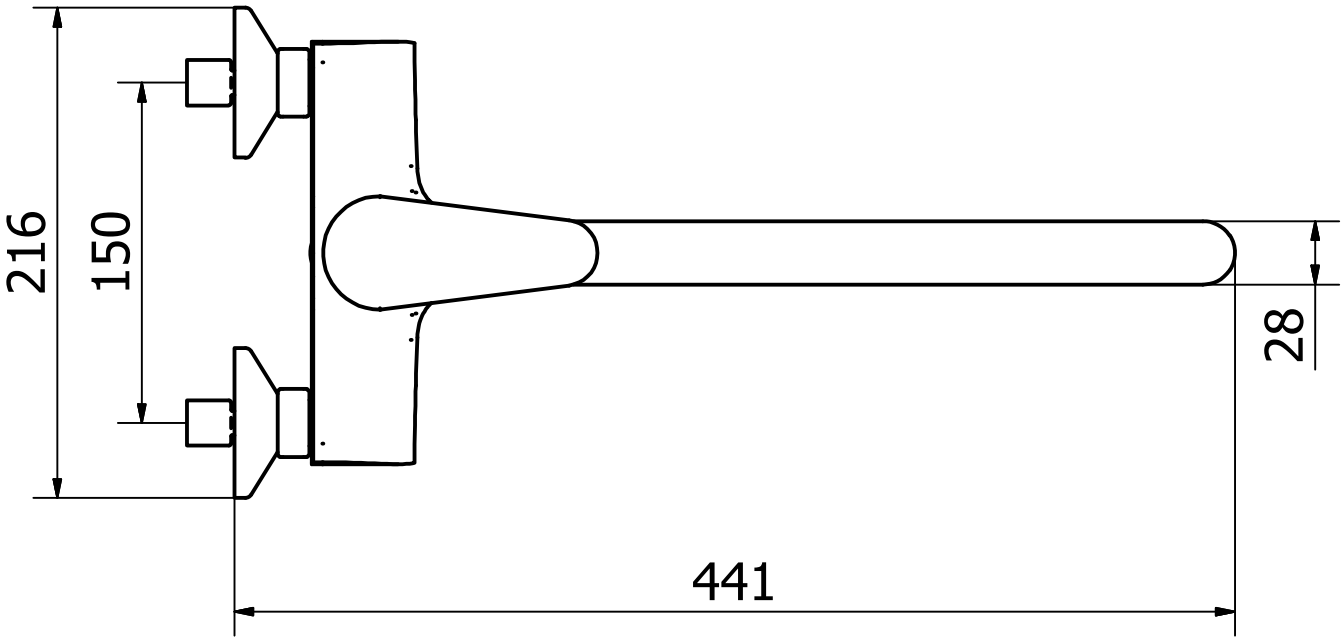
216
150
28
441